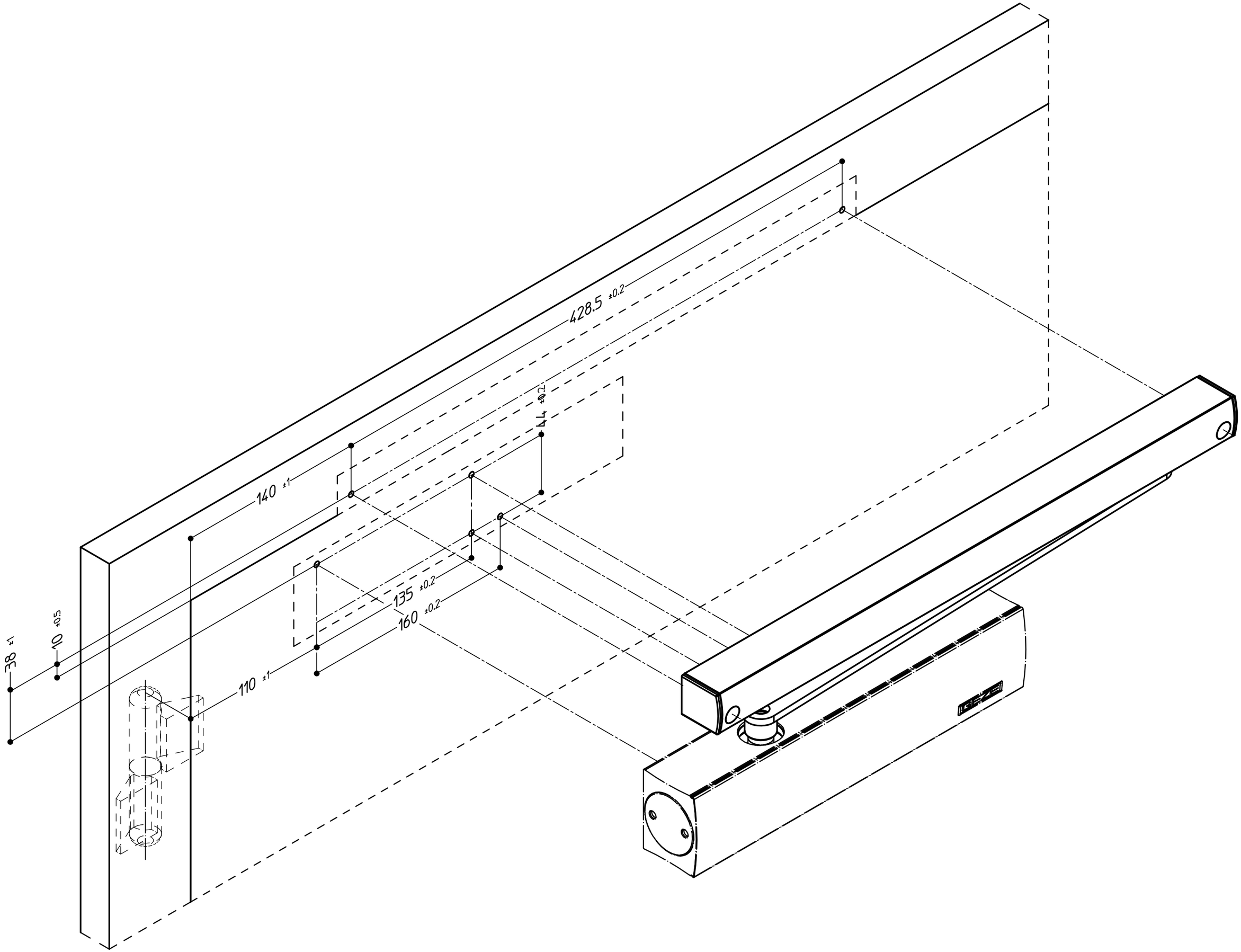
428.5 ±0.2
44 ±0.2
140 ±1
135 ±0.2
160 ±0.2
110 ±1
10 ±0.5
38 ±1